PROLON

QUICK START GUIDE

M2000 SERIES

www.proloncontrols.com | info@proloncontrols.com
17 510 rue Charles, Suite 100, Mirabel, QC, J7J 1X9

REV.6.0
PL-QCK-M2000-EN

Table of Contents

Staged Boiler Controller *(PL-M2000-BLR)* 4

Modulating Boiler Controller *(PL-M2000-BLR)* 6

Chiller Controller *(PL-M2000-CHL)* 8

Fan Coil Unit Controller - Two-Pipe System *(PL-M2000-FCU)* 10

Fan Coil Unit Controller - Four Pipe System *(PL-M2000-FCU)* 12

FlexIO Controller *(PL-M2000-FLX)* 14

Heatpump Controller *(PL-M2000-HP & PL-M2000-HPS)* 16

Hydronic Controller *(PL-M2000-HYD)* 18

Make Up Air Controller *(PL-M2000-MUA)* 20

Rooftop Controller *(PL-M2000-RTU & PL-M2000-RTUS)* 22

Compliance 24

Technical Specifications 24

© Copyright 2021 Prolon. All rights reserved.
No part of this document may be photocopied or reproduced by any means, or translated to another language without prior written consent of Prolon. All specifications are nominal and may change as design improvements are introduced. Prolon shall not be liable for damages resulting from misapplication or misuse of its products. All trademarks are the property of their respective owners.

Staged Boiler Controller *(PL-M2000-BLR)*

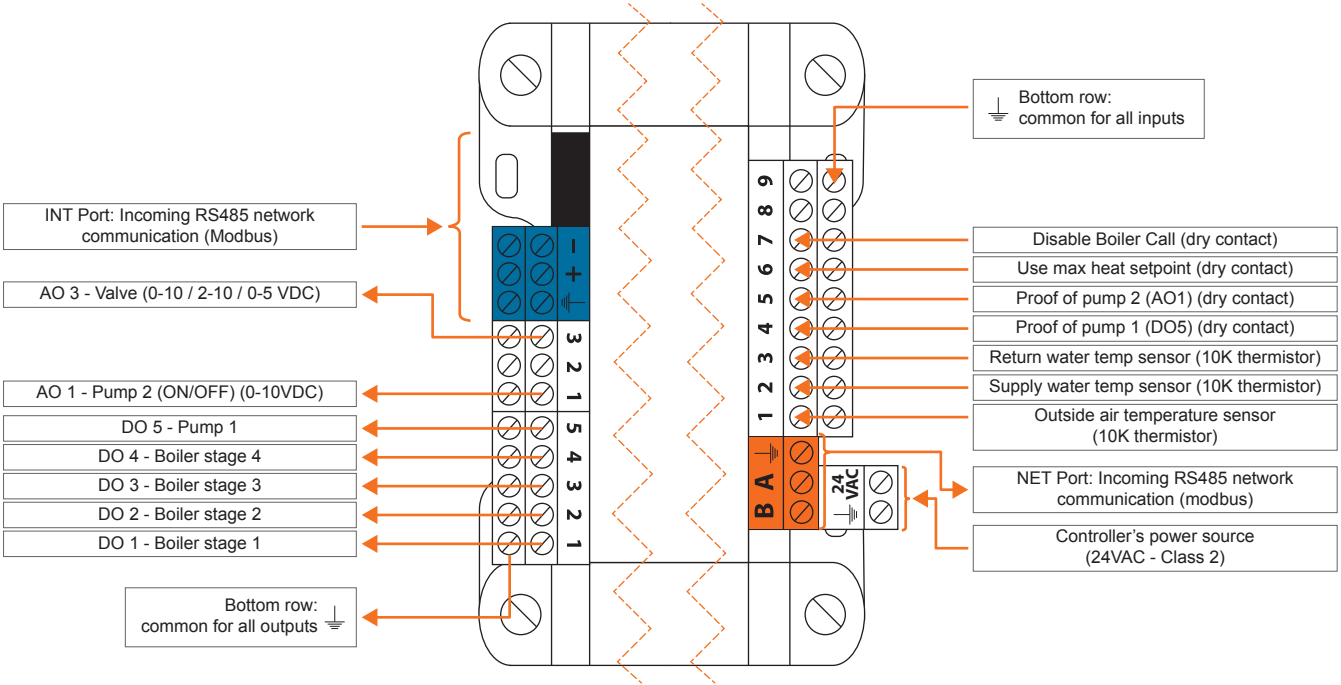

-4 to 122 °F (-20 to 50 °C) Non-condensing

cULus Listed; UL 916 Energy Management Equipment, File E364757, Vol.1

Modulating Boiler Controller *(PL-M2000-BLR)*

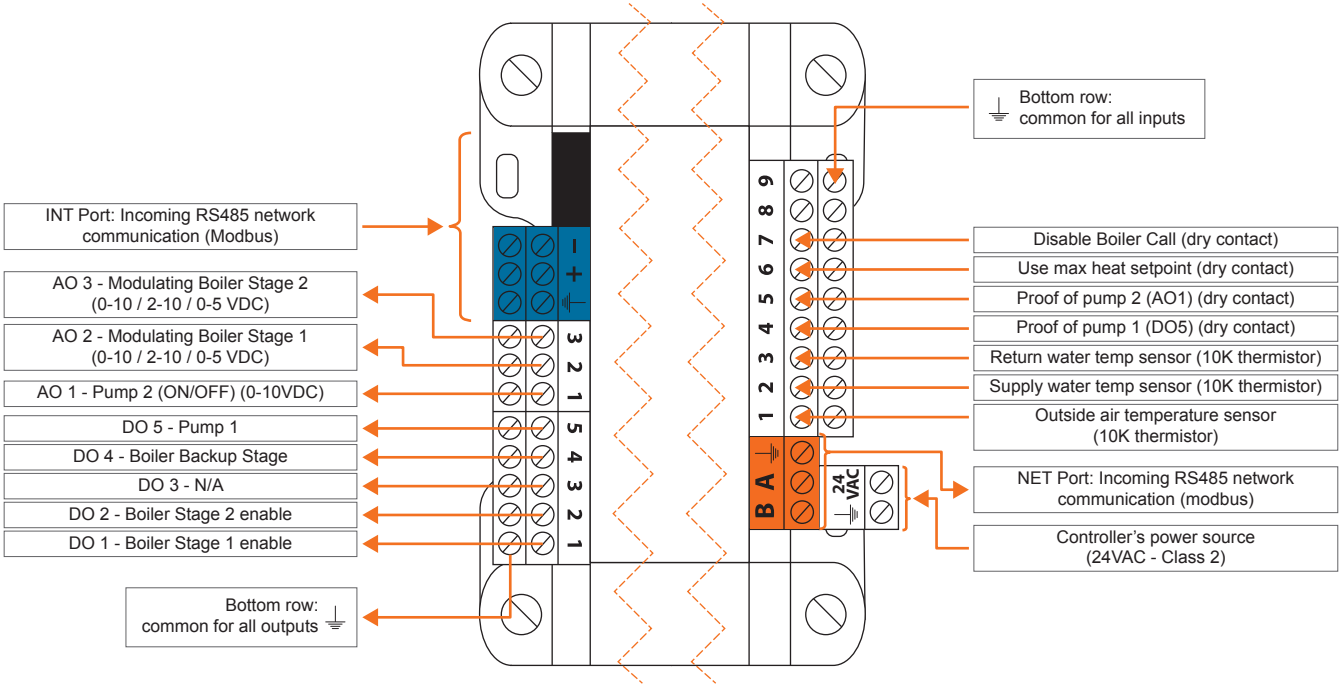

-4 to 122 °F (-20 to 50 °C) Non-condensing

cULus Listed; UL 916 Energy Management Equipment, File E364757, Vol.1

Chiller Controller *(PL-M2000-CHL)*

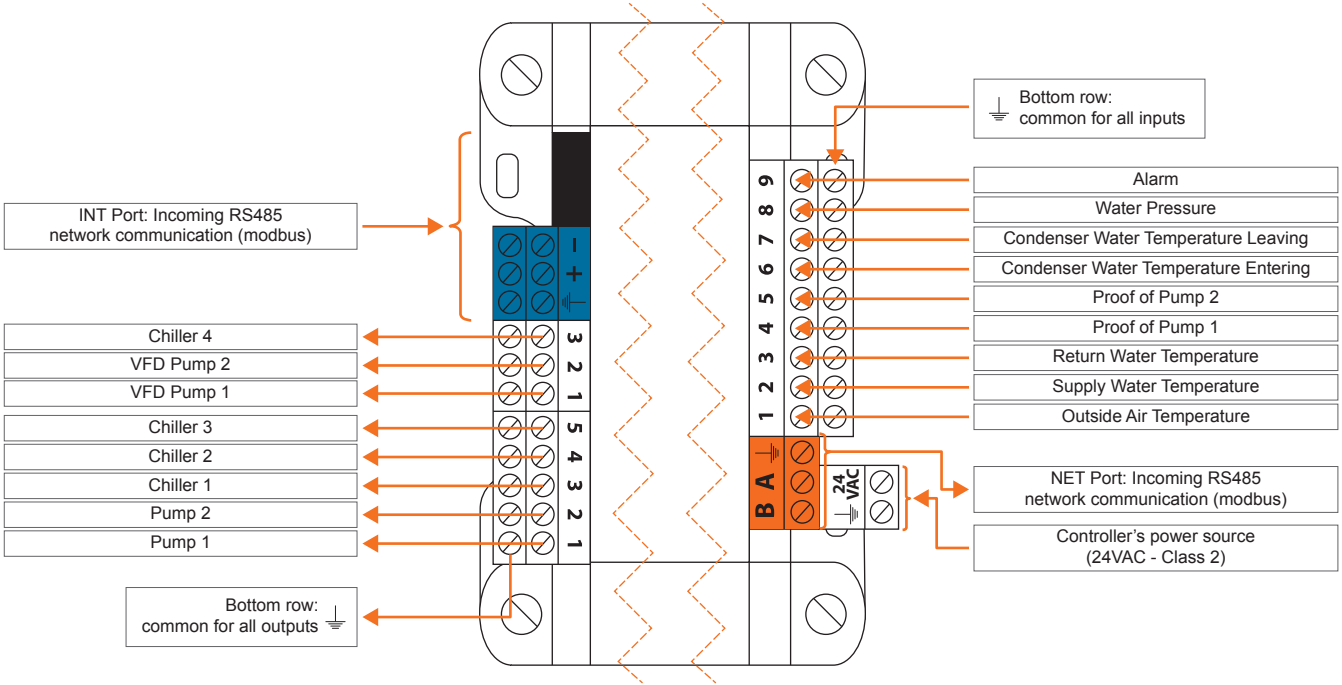

-4 to 122 °F (-20 to 50 °C) Non-condensing

cULus Listed; UL 916 Energy Management Equipment, File E364757, Vol.1

Fan Coil Unit Controller - Two-Pipe System *(PL-M2000-FCU)*

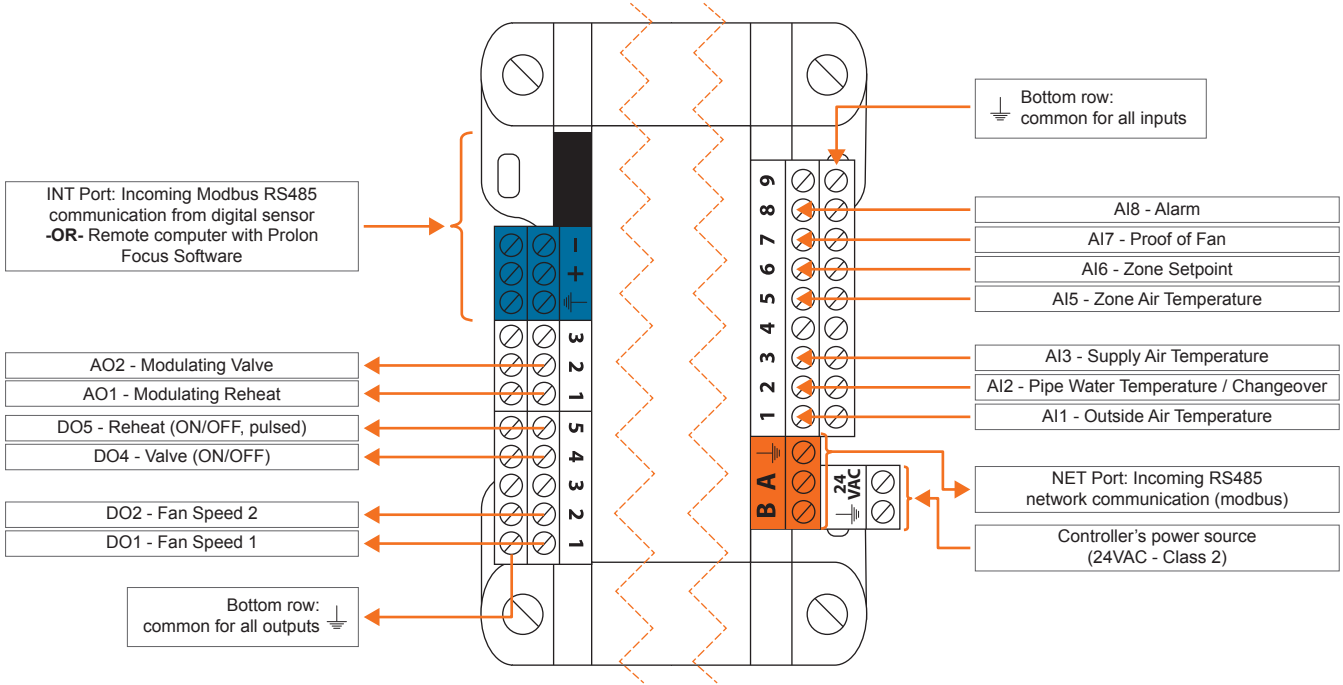

-4 to 122 °F (-20 to 50 °C) Non-condensing

cULus Listed; UL 916 Energy Management Equipment, File E364757, Vol.1

Fan Coil Unit Controller - Four Pipe System *(PL-M2000-FCU)*

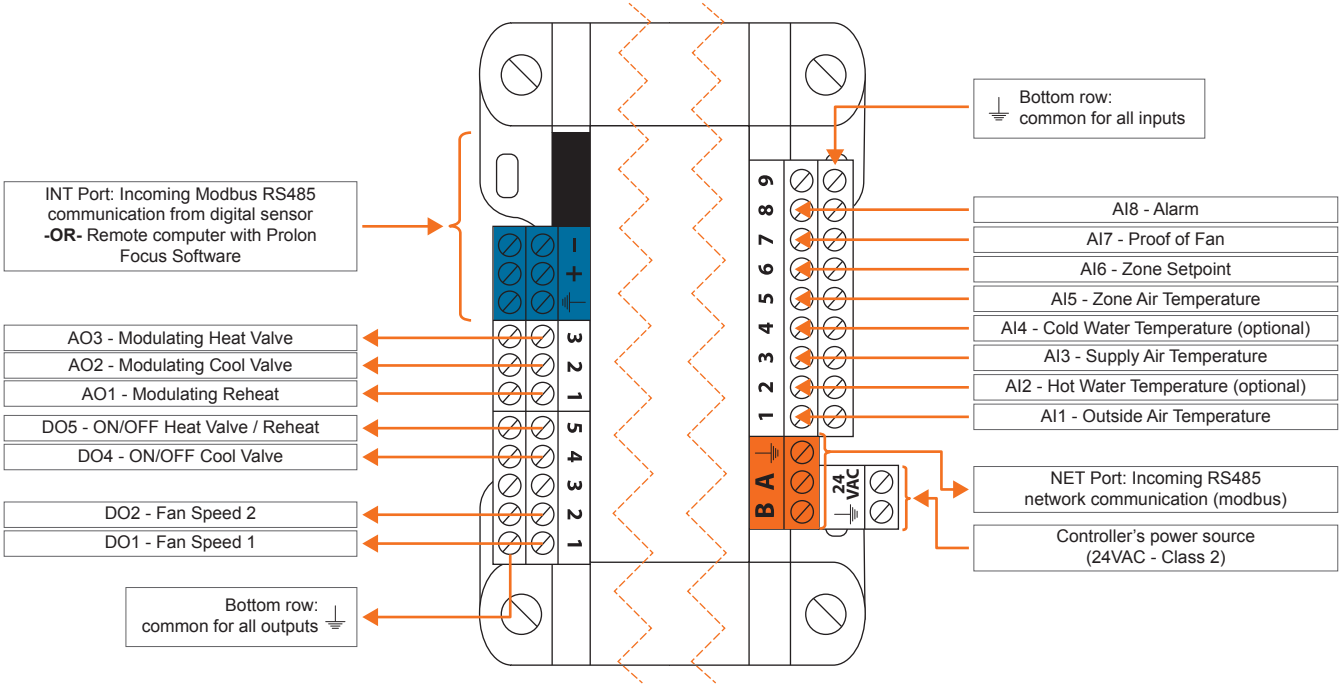

-4 to 122 °F (-20 to 50 °C) Non-condensing

cULus Listed; UL 916 Energy Management Equipment, File E364757, Vol.1

FlexIO Controller *(PL-M2000-FLX)*

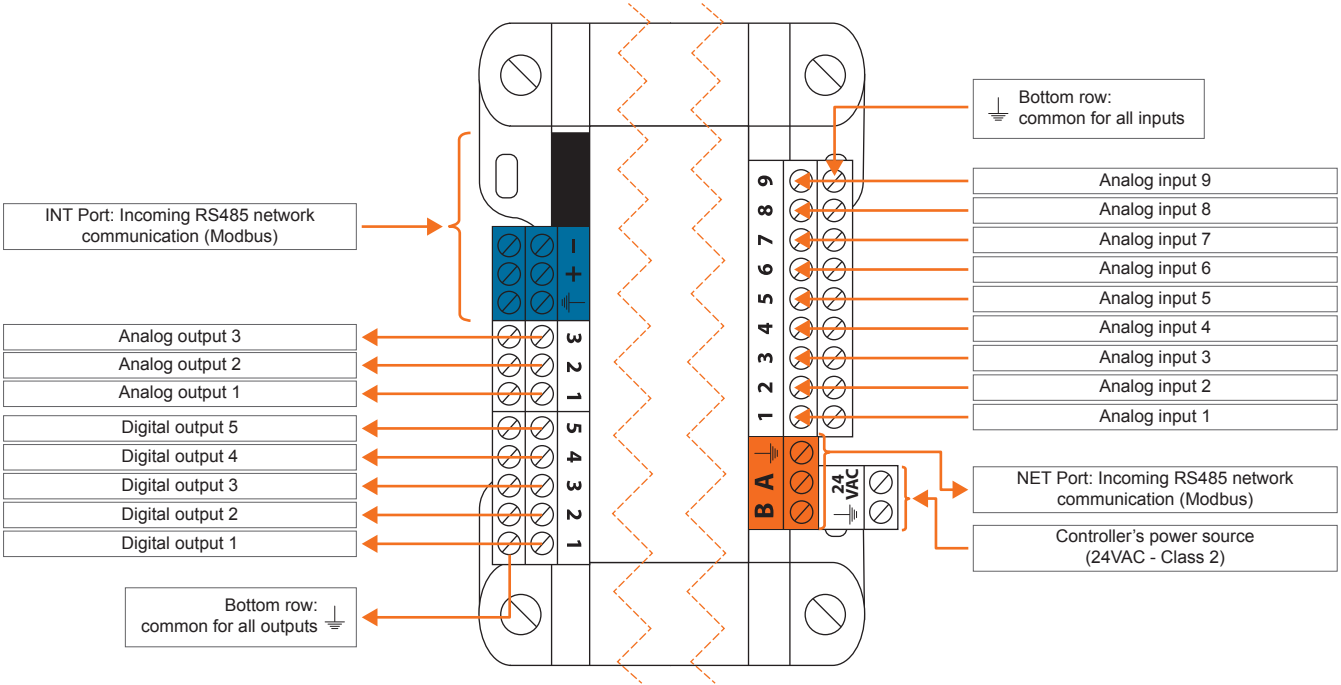

-4 to 122 °F (-20 to 50 °C) Non-condensing

cULus Listed; UL 916 Energy Management Equipment, File E364757, Vol.1

Heatpump Controller *(PL-M2000-HP & PL-M2000-HPS)*

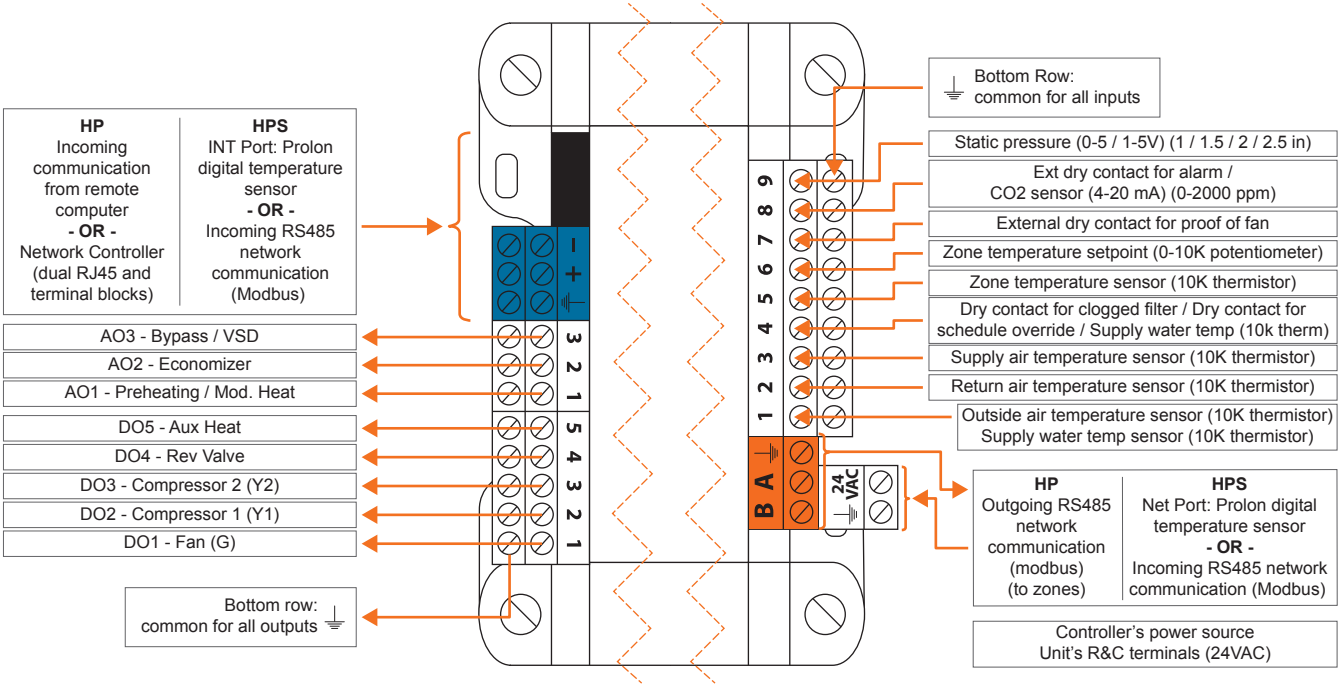

-4 to 122 °F (-20 to 50 °C) Non-condensing

cULus Listed; UL 916 Energy Management Equipment, File E364757, Vol.1

Hydronic Controller *(PL-M2000-HYD)*

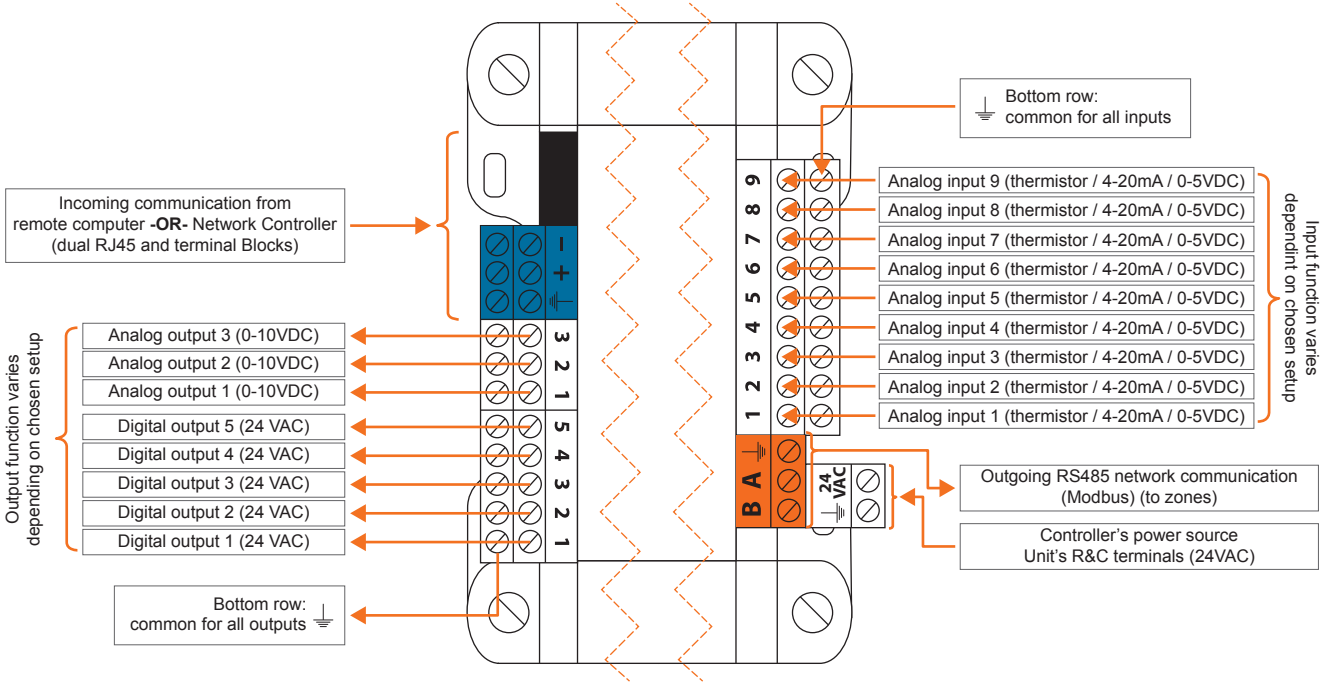

-4 to 122 °F (-20 to 50 °C) Non-condensing

cULus Listed; UL 916 Energy Management Equipment, File E364757, Vol.1

Make Up Air Controller *(PL-M2000-MUA)*

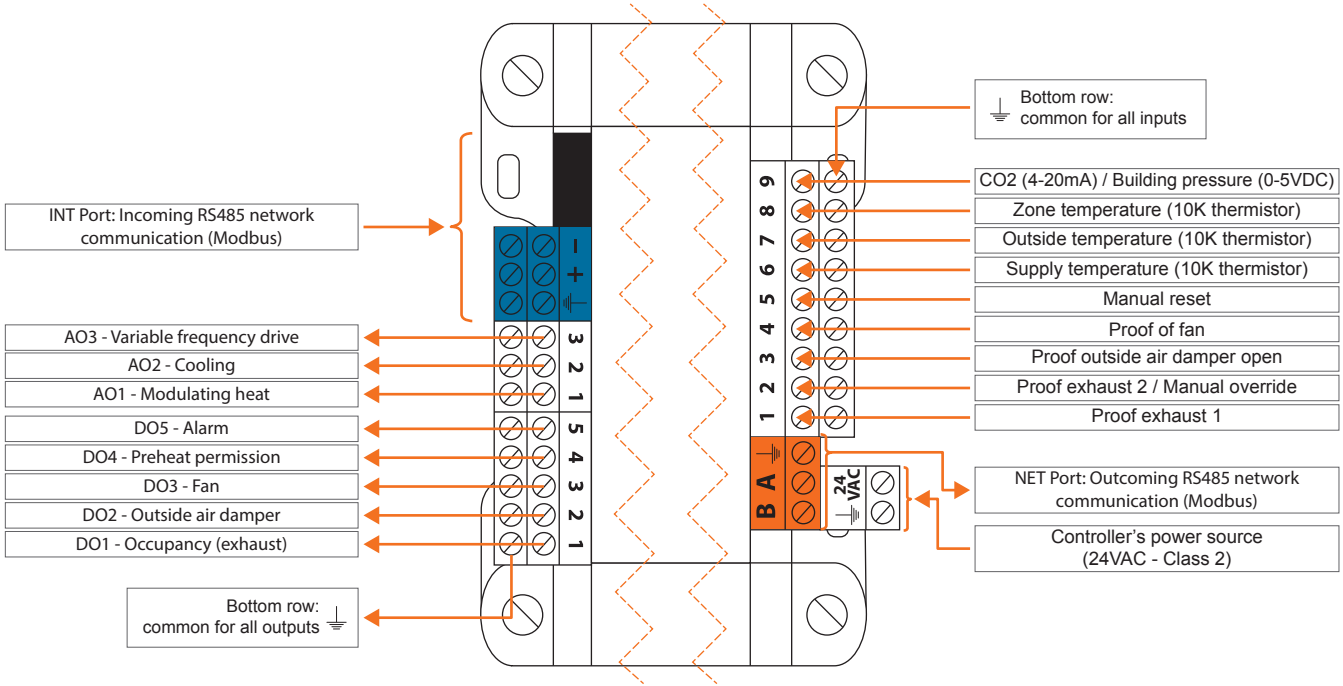

-4 to 122 °F (-20 to 50 °C) Non-condensing

cULus Listed; UL 916 Energy Management Equipment, File E364757, Vol.1

Rooftop Controller *(PL-M2000-RTU & PL-M2000-RTUS)*

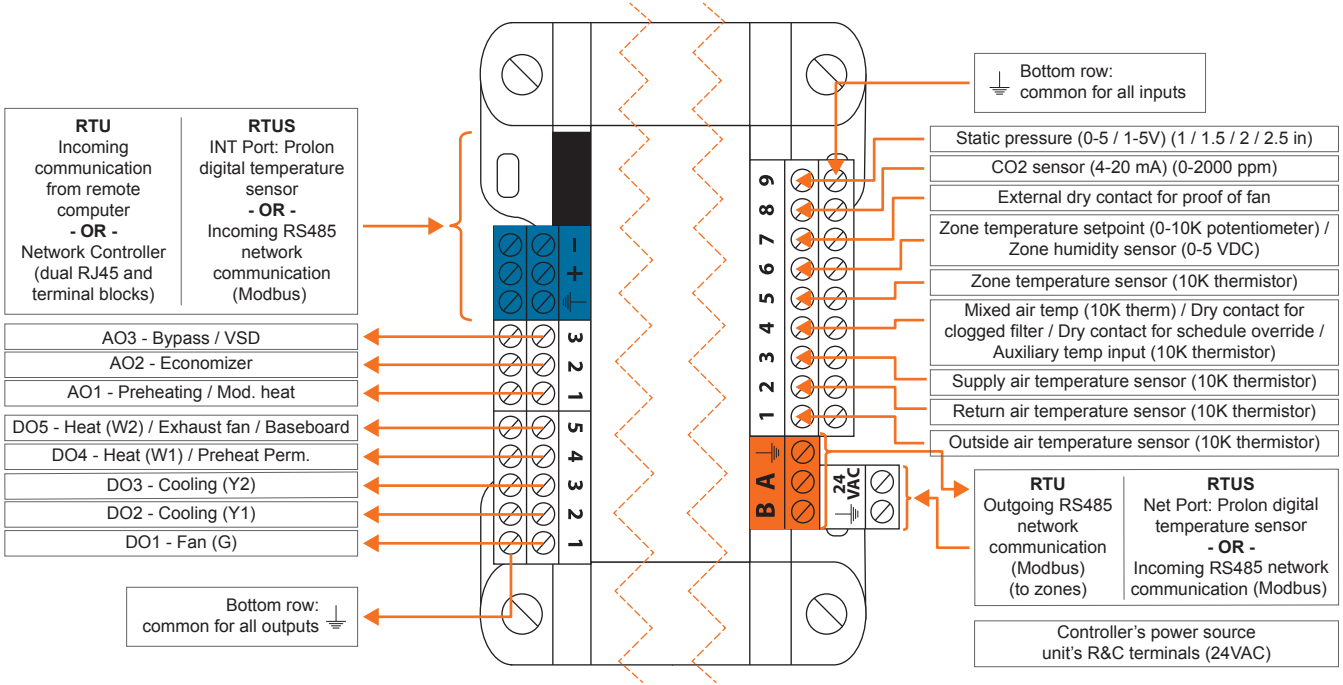

-4 to 122 °F (-20 to 50 °C) Non-condensing

cULus Listed; UL 916 Energy Management Equipment, File E364757, Vol.1

Compliance

- cULus Listed; UL 916 Energy Management Equipment, File E364757, Vol.1
- CAN/CSA-C22.2 No. 2015-12, Signal Equipment
- FCC Compliant to CFR47, Part 15, Subpart B, Class B
- Industry Canada (IC) Compliant to ICES-003, Issue 5: CAN ICES-3 (B) / NMB-3(B)
- RoHS Directive (2002/95/EC)

FCC User Information
This device complies with Part 15 of the FCC Rules. Operation is subject to the following two conditions: (1) this device may not cause harmful interference, and (2) this device must accept any interference received, including interference that may cause undesired operation.

Industry Canada
This Class (B) digital apparatus meets all the requirements of the Canadian Interference-Causing Equipment regulations.

Cet appareil numérique de la Classe (B) respecte toutes les exigences du Réglement sur le matériel brouilleur du Canada.

Technical Specifications

Supply: 24 VAC ±10%, 50/60 Hz, Class 2

Power: 5 VA (consumption), 40 VA (Input)