PROLON

HARDWARE GUIDE

Unit Ventilator Controller M2000 Series

Specifications and Operational Guide

www.proloncontrols.com | info@proloncontrols.com
17 510, rue Charles, Suite 100, Mirabel, QC, J7J 1X9

REV. 7.7.1
PL-HRDW-UNV-M2000-C/F-EN

Table of Contents

General Information **4**
- PL-M2000 Unit Ventilator Controller 4
- Description 4
- General Behavior 4

Operating Sequence **5**
- Fan 5
- Two-Pipe System (Water Coil) 5
- Two-Pipe System (Face & Bypass) 5
- Four-Pipe System 6
- Economizer 6
- Components 7
- Component Identification 7
- LEDs and Switches 8
- HAND/OFF/AUTO Switches 9
- Jumpers 9
- Input and Output Identification 10
- Addressing Dipswitch Configuration for Network Communication 12

Inputs **13**
- Temperature Sensors 13
- Alarm Input 13
- Proof of Fan 14
- CO2 Reading 14
- Room Sensors 14
- Analog Room Sensor (PL-RS Series) 15
- Digital Room Sensors 15

Outputs **16**
- Output Specifications 16
- Typical Connection of the Digital Outputs 17
- Typical Connection of the Analog Outputs 17

Power Source & Network **18**
- Power Source 18
- Network Communication 18

Technical Specifications **19**

Compliance **20**
- FCC User Information 20
- Industry Canada 20

Overall Dimensions **21**

Table of Figures

Figure 1 - Component Identification 7
Figure 2 - LEDs Identification 8
Figure 3 - Location of the EXTERNAL jumpers 9
Figure 4 - Location of the INTERNAL jumpers 9
Figure 5 - INT and NET jumpers 9
Figure 6 - AI jumpers 9
Figure 7 - RJ45 Pinout 10
Figure 8 - Input and Output Identification (Two-Pipe System) 10
Figure 9 - Input and Output Identification (Two-Pipe System w/ Face & Bypass) 11
Figure 10 - Input and Output Identification (Four Pipe System) 11
Figure 11 - Addressing Dipswitch 12
Figure 12 - Connecting the Temperature Sensors 13
Figure 13 - Connecting the Alarm Input Contacts to the Controller 13
Figure 14 - Connecting the Proof of Fan Contact to the Controller 14
Figure 15 - Connecting the CO2 Sensor 14
Figure 16 - Typical Wiring of the PL-RS Room Sensor to the Controller 15
Figure 17 - Connecting the Digital Sensor to the Controller 15
Figure 18 - Wiring Example of Digital Outputs 1 and 2 17
Figure 19 - Wiring Example of Analog Output 2 17
Figure 20 - Connecting the 24VAC Power Source 18
Figure 21 - Connecting to the Network 18
Figure 22 - M2000 Size Diagram 21

PL-M2000 Unit Ventilator Controller

Description

The Prolon M2000-UNV Unit Ventilator Controller is a microprocessor-based controller designed to operate Two-Pipe or Four-Pipe hydronic systems with Economizer, including Face and Bypass control. It uses PI (Proportional-Integral) control loops to optimize HVAC management and offers a variety of functions such as Two-Pipe automatic mode-change based on supply water temperature, periodic purge cycles, reheating sequences, CO_2 control and more.

General Behavior

The Prolon M2000 Unit Ventilator controller monitors dedicated inputs and uses pre-established control sequences to drive Unit Ventilator equipment using dedicated outputs. The main goal of this controller is to keep the zone temperature within the user-defined setpoints by driving valves, allowing hot or cold water to flow through heat exchanger coils as required, and then circulating air past these coils into the zone via a fan. The UNV controller supports both On-Off and Modulating valves in either Two-Pipe or Four-Pipe configurations.

If the equipment uses a Face & Bypass damper, the controller will activate the valve and modulate the damper to respond to demand, provided favorable supply water is available.

If the equipment uses an Economizer damper, it will prioritize use of the Economizer upon a call for cooling, provided the outside air temperature is low enough. The Economizer can also be requested to modulate open in response to rising CO_2 concentrations. Additional reheat sequences can be enabled to heat the air as required.

When networked with other Prolon devices, the UNV controller can periodically share its status to a Master controller and help drive the direction of the whole system.

Operating Sequence

Fan

The Fan can operate in Single Speed, Two Speed or Three Speed Mode. The first speed is primarily occupancy based but can be configured to activate on a call for heat or cool. The user can define how the fan reacts based on various states of occupancy, which can be received via the Prolon network from a Network or Master Controller. If no Prolon network is present, the M2000-UNV determines its occupancy state from the on-board real-time clock.

The second and third speeds, if enabled, are activated based on cooling or heating demand.

However, for ON-OFF valves, the second fan speed will instead be determined by valve activity: when a valve opens (for either cooling or heating purposes), the second fan speed is activated.

Note that valves require a call for the first fan speed before they can open.

Two-Pipe System (Water Coil)

In a Two-Pipe setup, the UNV controller constantly monitors the water supply mode and can then react intelligently to calls for heat or cool by opening the valve only if the water supply is favorable. The water supply temperature can be obtained via a local thermistor input, a dry contact or shared via the Prolon network. In the case of a local thermistor, a purge cycle is available to periodically flush out stagnant water and update the water supply mode.

The valve requires both a call and proof of fan before it can open.

For modulating valves, a reheat sequence is available to heat the air (provided the water supply is in heating mode) during periods where there is no particular cooling or heating demand.

Configurable outside air and supply air temperature limits are in place to establish safeguards on operation. The controller also offers a Freeze Protection sequence which will drive the valve to a configurable position whenever the supply air becomes too cold, and the fan is stopped.

Two-Pipe System (Face & Bypass)

In a Two-Pipe setup with Face & Bypass, the UNV controller constantly monitors the water supply mode and can then react intelligently to calls for heat or cool by opening the valve only if the water supply is favorable. The water supply temperature can be obtained via a local thermistor input, a dry contact or shared via the Prolon network. In the case of a local thermistor, a purge cycle is available to periodically flush out stagnant water and update the water supply mode.

The valve and damper require both a call and proof of fan before they can open.

If the water supply is in heating mode and the outside air drops below certain configurable thresholds, the UNV controller provides:

- A reheat sequence to heat the air during periods where there is no particular cooling or heating demand
- A protection sequence that opens the valve to prevent frost buildup on the coil

Configurable outside air and supply air temperature limits are also in place to establish safeguards on operation. The controller also offers a Freeze Protection sequence which will drive the valve to a configurable position whenever the supply air becomes too cold, and the fan is stopped.

Four-Pipe System

In a Four-Pipe setup, the UNV controller does not need to track the water supply temperatures since it is assumed that the heating and cooling valves will have continuous access to adequate sources of hot and cold water, and they will simply open respectively on a call for heating or cooling.

The valves require both a call and proof of fan before they can open.

For modulating valves, a reheat sequence is available to heat the air during periods where there is no particular cooling or heating demand.

Configurable outside air and supply air temperature limits are also in place to establish safeguards on operation. The controller also offers a Freeze Protection sequence which will drive the valve to a configurable position whenever the supply air becomes too cold, and the fan is stopped.

Economizer

The optional Economizer sequence is enabled when the outside air temperature drops below a configurable low balance point. The damper will then modulate to maintain a supply air setpoint while the cooling valve will remain closed. The supply air setpoint follows a demand-based reset scale.

The Economizer maintains a configurable minimum opening position that changes based on fan speed. The minimum opening position is set to zero if the fan stops or if the supply air or outside air temperatures become invalid. Optionally, upon a transition from unoccupied to occupied, the minimum position can be set to zero for a configurable delay (morning ventilation).

The Economizer can optionally modulate based on high CO_2 concentrations.

Component Identification

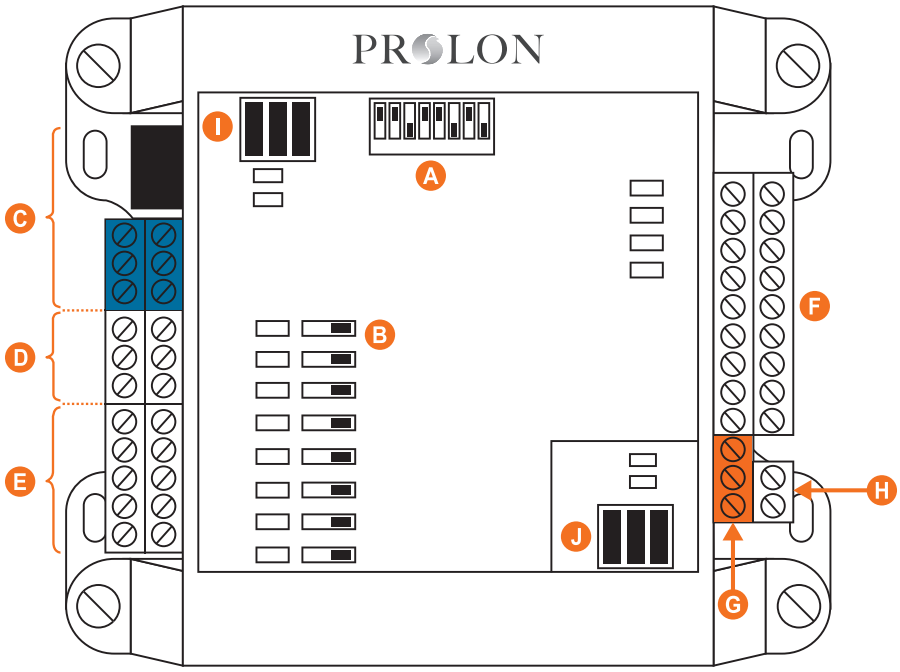

Figure 1 - Component Identification

Legend:

A - Addressing Dipswitch

B - AUTO/OFF/HAND Switches

C - RS485 INT port for interface communication (RJ45 plug and screw connectors are in parallel)

D - Analog outputs (3)

E - Digital outputs (5)

F - Analog inputs (9)

G - RS485 NET port for network communication

H - Terminal block for 24VAC (Class 2 transformer)

I - Jumpers for terminating and bias resistors for the INT port

J - Jumpers for terminating and bias resistors for the NET port

LEDs and Switches

The M2000 has various LEDs which are linked to different functions and outputs of the controller. Each LED is individually identified to help the user make a quick visual diagnostic of the controller's activity and status.

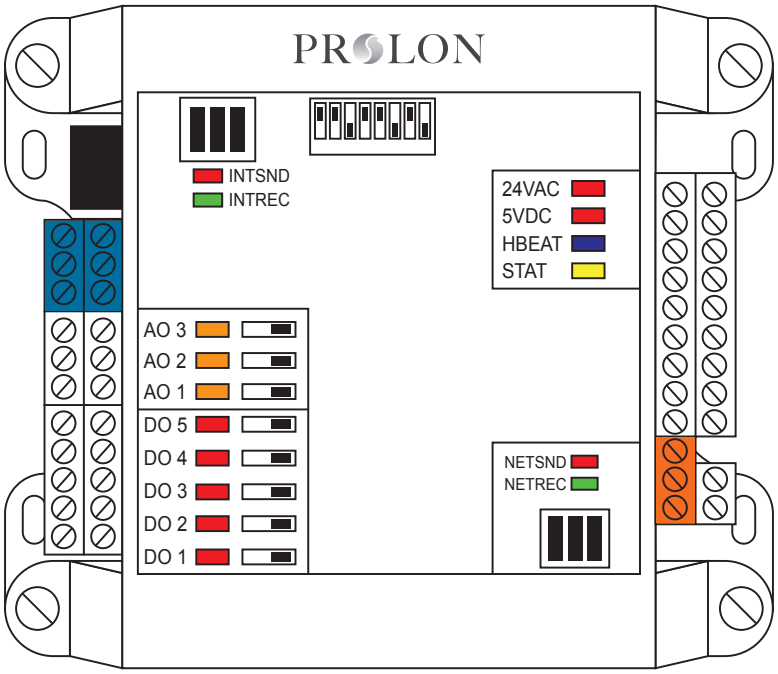

Figure 2 - LEDs Identification

LED Descriptions

- **24 VAC**: The M2000 is receiving 24 VAC from the power source.
- **5V DC**: The microchip and other components on the M2000 are being powered successfully by a 5 VDC source derived from the 24VAC source.
- **HBEAT**: When this LED is blinking, the microchip is active and the controller's program is running (normal). When this LED is ON and steady, the M2000 is inactive and the microchip is awaiting programming (you must use Prolon's Focus software to reprogram the microchip).
- **STAT**: Reserved.
- **NETSND**: Indicates the transmission of data onto the network communication bus.
- **NETREC**: Indicates reception of data from the network communication bus.
- **INTSND**: Indicates the transmission of data onto the interface communication bus.
- **INTREC**: Indicates the reception of data from the interface communication bus.
- **AO3**: The intensity of the LED represents the voltage present on analog output 3.
- **AO2**: The intensity of the LED represents the voltage present on analog output 2.
- **AO1**: The intensity of the LED represents the voltage present on analog output 1.
- **DO5**: Represents the activity of digital output 5.
- **DO4**: Represents the activity of digital output 4.
- **DO3**: Represents the activity of digital output 3.
- **DO2**: Represents the activity of digital output 2.
- **DO1**: Represents the activity of digital output 1.

HAND/OFF/AUTO Switches

Each output on the M2000 has a dedicated switch that lets the user manually override the activity of the output. “HAND” mode (switch at rightmost position) fully activates the output (24 VAC for digital outputs, 10VDC for analog outputs). “OFF” (switch at center) deactivates the output and “AUTO” (switch at left) returns control of the output to the program in the M2000’s microchip.

Jumpers

The M2000 has jumpers that are externally accessible (see Figure 3), as well as jumpers that are inside the controller on the top internal board (see Figure 4), that allow for configuration of various hardware elements.

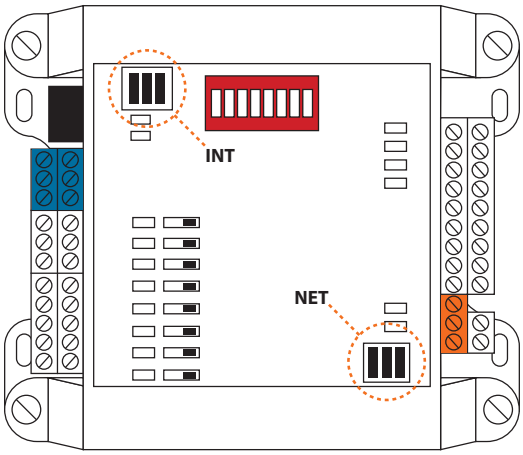

Figure 3 - Location of the EXTERNAL jumpers

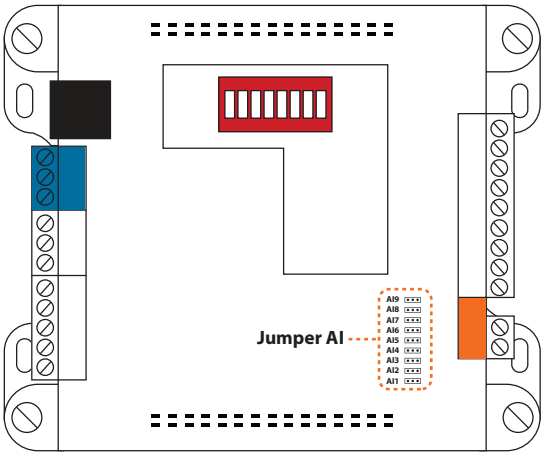

Figure 4 - Location of the INTERNAL jumpers

- **INT**: These are the jumpers for the bias and terminating resistors used for the interface communication bus. See the Prolon network guide for information about bias and terminating resistors. (See Figure 5)
- **NET**: These are the jumpers for the bias and terminating resistors used for the network communication bus. See the Prolon network guide for information about bias and terminating resistors. (See Figure 5)
- **AI 1 - 9**: These jumpers allow the user to select the signal mode of the associated analog input. (See Figure 6)

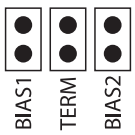

Figure 5 - INT and NET jumpers

Figure 6 - AI jumpers

Input and Output Identification

All the inputs and outputs of the M2000 use pluggable screw type terminal blocks with elevator style clamping, which make connections easier and more secure.

The M2000 Unit Ventilator Controller has 2 separate communication ports offering the same functionality on each. Both act as ports for incoming Modbus communications from other Prolon devices or interfaces, such as a Network Controller or remote computer with Prolon Focus software.

The "INT" Port (see below) offers dual RJ45 type connectors ***in parallel*** with screw type terminal blocks. The RJ45 connectors allow the use of premade CAT5 cables for simple plug-and-play RS485 communication. These RJ45 connectors follow the Modbus pinout specification for RS485 communication.

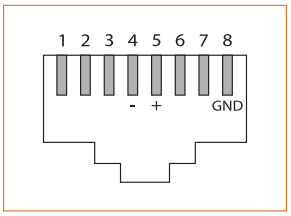

Figure 7 - RJ45 Pinout

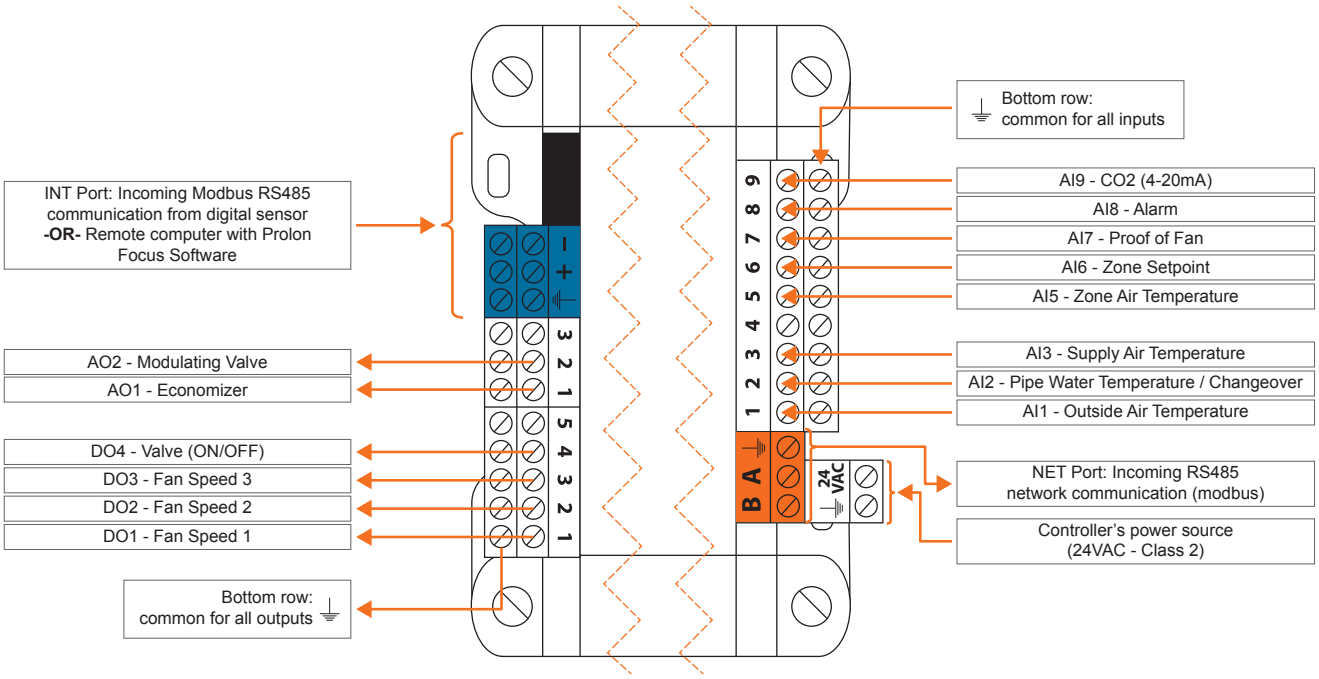

Figure 8 - Input and Output Identification (Two-Pipe System)

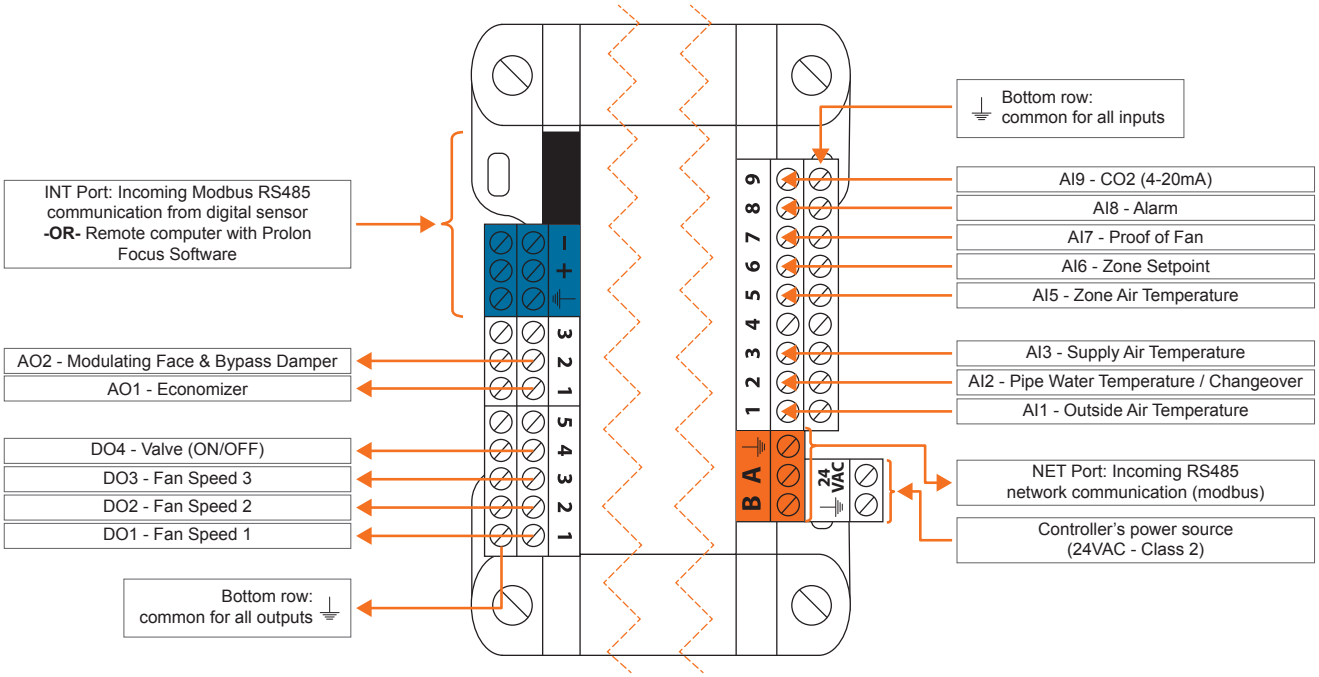

Figure 9 - Input and Output Identification (Two-Pipe System w/ Face & Bypass)

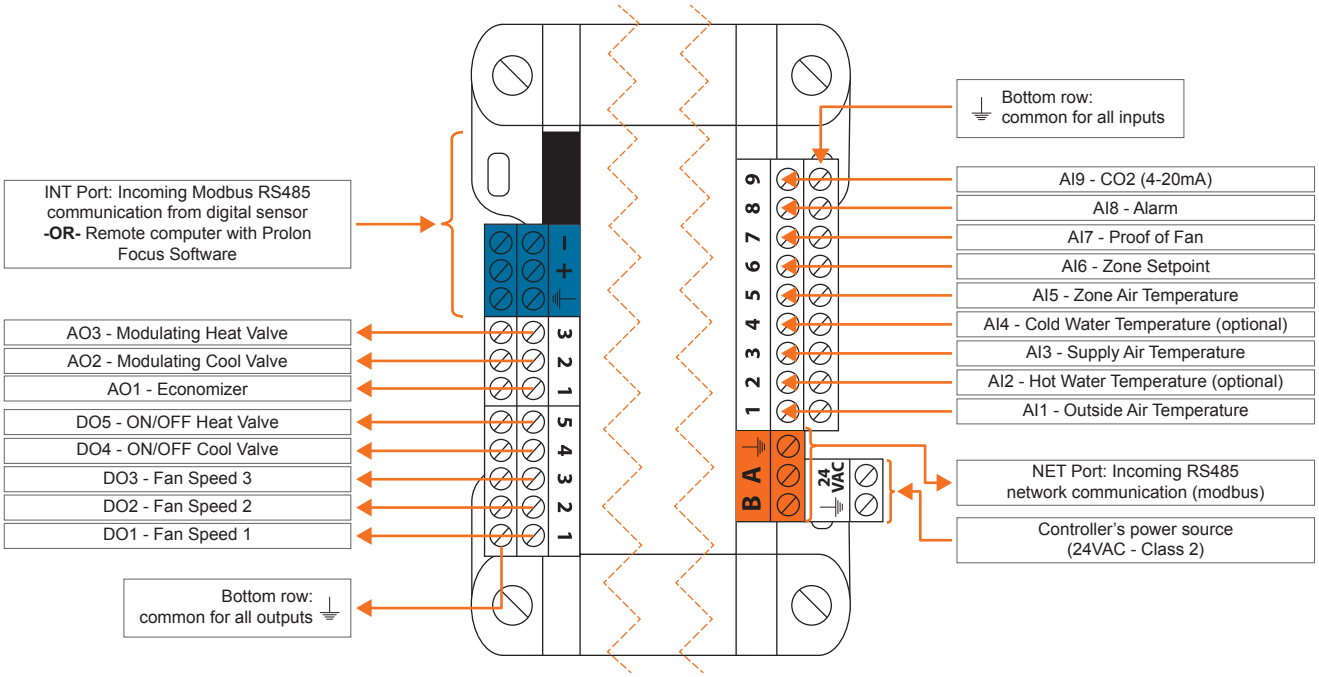

Figure 10 - Input and Output Identification (Four Pipe System)

Addressing Dipswitch Configuration for Network Communication

For proper communication, a unique address must be configured on each controller by setting the first 7 switches on the addressing dipswitch to the desired value.

These switches are numbered from 1 to 7 and represent a binary value from 1 to 64 (1, 2, 4, 8, 16, 32, and 64 respectively). The last switch (#8) is reserved. The value of each switch that is in the ON position is added together to form the nume rical address of the controller.

The example in Figure 11 shows the switches 1, 2 and 4 in the ON position. Therefore, the corresponding values are 1, 2 and 8, giving an address sum of 11.

The Prolon network allows a maximum of 127 addresses; therefore 127 controllers.

Figure 11 - Addressing Dipswitch

Inputs

Temperature Sensors

The M2000 Unit Ventilator has four analog inputs that can monitor outside air, coil water supply (hot & cold) and supply air temperatures and will integrate these readings into its control sequence. The sensors used are standard 10k type 3 thermistors that share a single common connection.

The outside air and two pipe coil water supply temperatures can also be provided by an alternate source on the Prolon network. If a network or master controller is present, they can relay these reading from one controller to another.

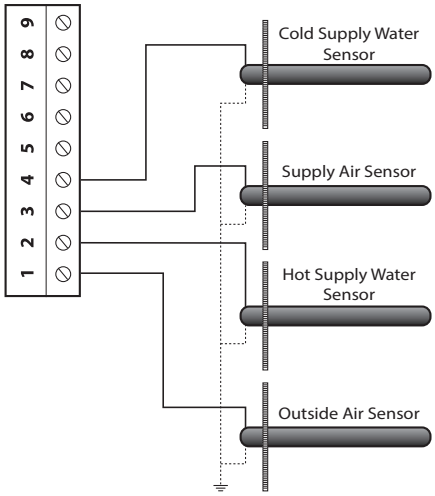

Figure 12 - Connecting the Temperature Sensors

Alarm Input

The M2000 Unit Ventilator controller can receive an input from an external alarm contact. The alarm can be configured as normally open or normally closed to match the alarm signal type. When activated, the alarm input will cause all valves to close and indicate that an active "alarm" is occurring when the controller is viewed via the Prolon Focus software.

Alternatively, the alarm contact can be used to manually trigger the Freeze Protection conditions, which causes the heating valve to be driven to a configurable position.

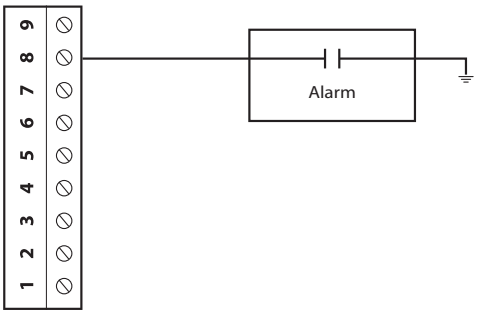

Figure 13 - Connecting the Alarm Input Contacts to the Controller

Proof of Fan

The M2000 Unit Ventilator has an analog input dedicated to the proof of fan signal. Please refer to Figure 14 to see how to correctly connect it to analog input 7. To indicate proof of fan, the contact must be closed.

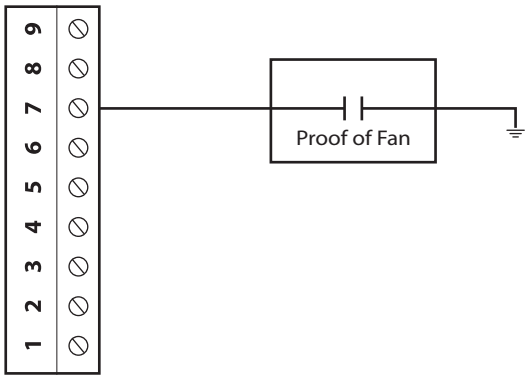

Figure 14 - Connecting the Proof of Fan Contact to the Controller

CO_2 Reading

Analog input 9 on the M2000 Unit Ventilator controller is dedicated to an optional CO_2 sensor (4-20 mA). Please refer to the following figure for correct wiring.

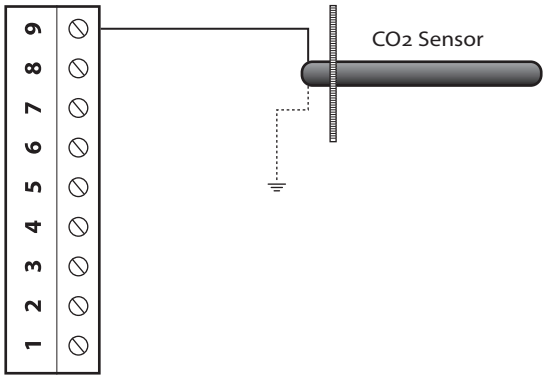

Figure 15 - Connecting the CO_2 Sensor

Room Sensors

Two types of room temperature sensors are available:

- Analog: Analog room temperature sensor (thermistor) with setpoint knob and override button
- Digital: Digital sensor, communicating over RS485 to the M2000

Analog Room Sensor (PL-RS Series)

The PL-RS series room sensors provide the M2000-UNV with a room temperature and setpoint. A push-button is also present to override the schedule. The PL-RS series are connected using a 3-conductor cable. Note that if a shielded cable is used to connect the PL-RS, the shield must be grounded at the GND of the M2000 to which it is connected. To activate the schedule override from the PL-RS, hold the override button for 3 seconds.

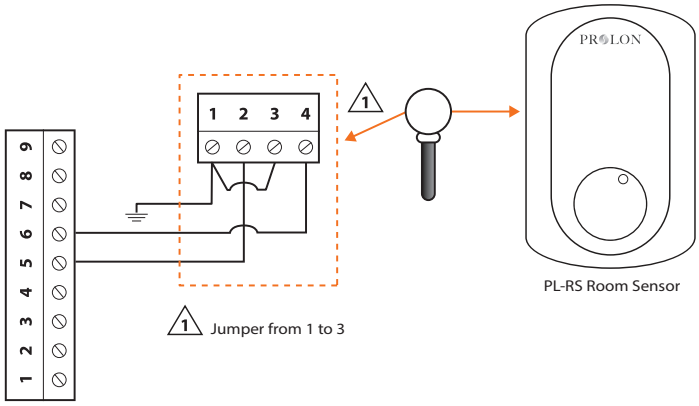

Figure 16 - Typical Wiring of the PL-RS Room Sensor to the Controller

Digital Room Sensors

Prolon offers various digital communicating sensors that can provide the M2000 with room temperature, room setpoint, and schedule override (T1000, T500, T200 sensors).

Typical wiring is as follows:

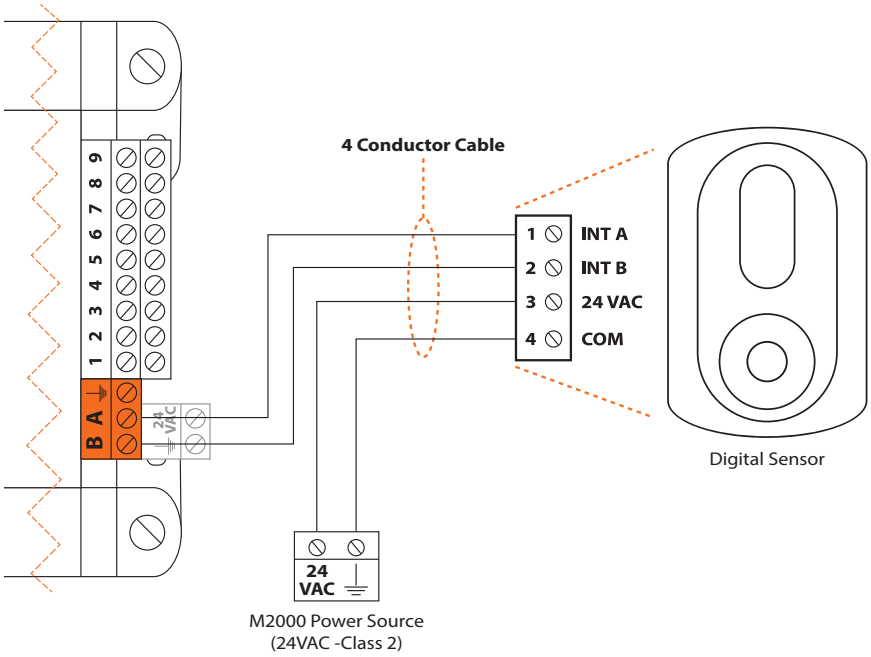

Figure 17 - Connecting the Digital Sensor to the Controller

Outputs

The M2000 Unit Ventilator controller has 8 configurable outputs: 5 Triac type 24VAC outputs and 3 analog outputs (0-10VDC modulating voltage). Output configuration is performed via the Prolon Focus software.

An integrated resettable fuse protects ***each*** of the outputs of the M2000 against current surges and short circuits. This protection will cut the current to the output as soon as an overload condition is detected. The fuse is round and yellow colored which, upon a short circuit condition, will heat up and change to orange. When the faulty wiring or circuit is fixed, the fuse will automatically reset and allow current to flow through the output again.

Output Specifications

Output	Type	Action
DO 1	Triac source 24VAC, Max Current: 300 mA	On-or-Off
DO 2	Triac source 24VAC, Max Current: 300 mA	On-or-Off
DO 3	Triac source 24VAC, Max Current: 300 mA	On-or-Off
DO 4	Triac source 24VAC, Max Current: 300 mA	On-or-Off
DO 5	Triac source 24VAC, Max Current: 300 mA	On-or-Off
AO 1	Configurable Analog Output: - 0 to 10 VDC - 2 to 10 VDC - 0 to 5 VDC Max Current: 40 mA	Voltage Modulation
AO 2	Configurable Analog Output: - 0 to 10 VDC - 2 to 10 VDC - 0 to 5 VDC Max Current: 40 mA	Voltage Modulation
AO 3	Configurable Analog Output: - 0 to 10 VDC Max Current: 40 mA	Voltage Modulation

Typical Connection of the Digital Outputs

On the M2000 Unit Ventilator controller, all triac outputs produce a 24 VAC live voltage when activated. Note that all output voltages originate from a single voltage supply: the equipment's transformer. Consequentially, only the live side of the output connections are usually needed; these are on the top row. The bottom row is the common (GND).

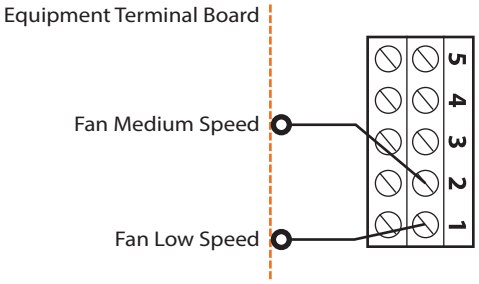

Figure 18 - Wiring Example of Digital Outputs 1 and 2

Typical Connection of the Analog Outputs

For all analog outputs, the common is found on the bottom row terminal block, and the active signals are found on the top row terminal block.

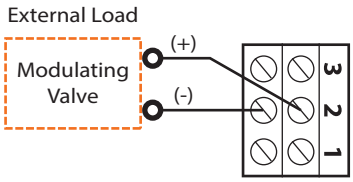

Figure 19 - Wiring Example of Analog Output 2

Power Source & Network

Power Source

The M2000 controller is powered by a 24 VAC power supply (class 2) by connecting the common (''C'' wire) to the "COM" terminal and the live (''R'' wire) to the "24 VAC" terminal. The common for all inputs and outputs is the same as the power source's common. All output power sources also originate from the source transformer (class 2).

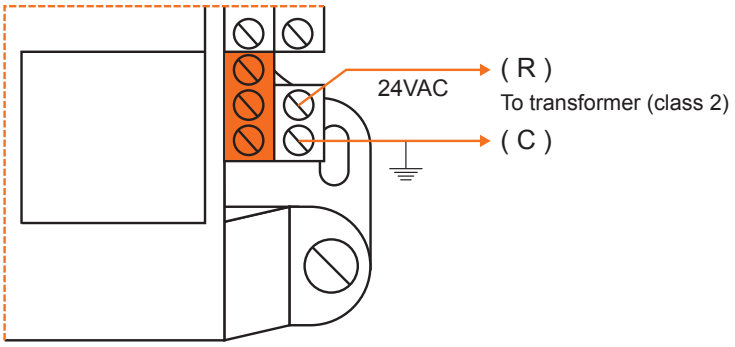

Figure 20 - Connecting the 24VAC Power Source

Network Communication

The Prolon M2000 Unit Ventilator controller is designed to work standalone or networked with Prolon master controllers. When networked, the master transmits the occupancy status, outside temperature and math demand in real-time. The network connections are made using the network terminal block located on the M2000 controller.

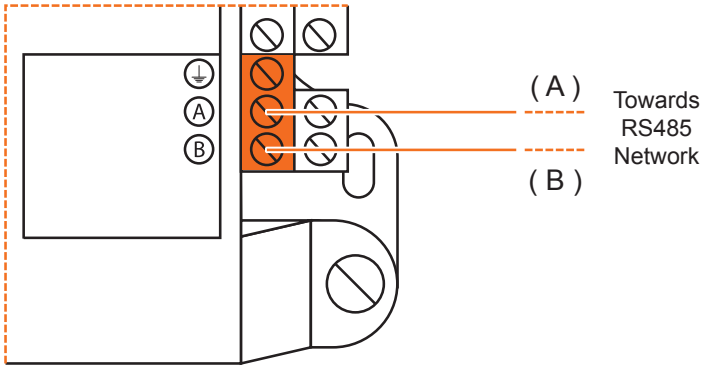

Figure 21 - Connecting to the Network

Technical Specifications

Supply: 24 VAC ±10%, 50/60 Hz, Class 2

Power: 5 VA (consumption), 40 VA (input)

Inputs: 9 analog inputs (outside temp / hot supply water temp / supply air temp / cold supply water / zone air temp/ zone setpoint / fan proof / alarm / CO_2). Input signals (thermistor / dry contact / 4-20 mA)

Digital Outputs: 5 triac outputs, 10-30 VAC source, 300 mA max (resettable fuse)

Analog Outputs: 3 x 0-10 VDC outputs, 40 mA max (resettable fuse)

Indication lights (LED): State of each output / Communication / Power / State of microprocessor

Microprocessor: PIC18F6722, 8 bits, 40 MHz, 128KB FLASH memory

Casing: Molded ABS, UL94-HB

Communication: Modbus RTU (RS485) up to 127 nodes

Baud Rates: 9600, 19200, 38400, 57600, 76800, 115200

Connection: Removable screw-type terminal blocks (max 16 AWG) and RJ45 modular jacks

Dimensions: 5.39" x 4.41" x 2.25" (137 mm x 112 mm x 57 mm)

Weights: 1.05 lbs (0.48 kg)

Environment: -4 to 122 °F (-20 to 50 °C) Non-Condensing

Certification: UL916 Energy Management Equipment, CAN/CSA-C22.2, RoHS, FCC part 15: 2012 class B

The performance specifications are nominal and conform to acceptable industry standards. Prolon Inc. will not be liable for damages resulting from misapplication or misuse of its products.

- cULus Listed; UL 916 Energy Management Equipment, File E364757, Vol.1
- CAN/CSA-C22.2 No. 2015-12, Signal Equipment
- FCC Compliant to CFR47, Part 15, Subpart B, Class B
- Industry Canada (IC) Compliant to ICES-003, Issue 5: CAN ICES-3 (B)/NMB-3(B)
- RoHS Directive (2002/95/EC)

FCC User Information

This device complies with Part 15 of the FCC Rules. Operation is subject to the following two conditions: (1) this device may not cause harmful interference, and (2) this device must accept any interference received, including interference that may cause undesired operation.

Caution: Any changes or modifications not approved by Prolon can void the user's authority to operate the equipment.

Note: This equipment has been tested and found to comply with the limits for a Class B digital device, pursuant to part 15 of the FCC Rules. These limits are designed to provide reasonable protection against harmful interference in a residential installation. This equipment generates, uses and can radiate radio frequency energy and, if not installed and used in accordance with the instructions, may cause harmful interference to radio communications. However, there is no guarantee that interference will not occur in a particular installation. If this equipment does cause harmful interference to radio or television reception, which can be determined by turning the equipment off and on, the user is encouraged to try to correct the interference by one or more of the following measures:

- Reorient or relocate the receiving antenna.
- Increase the separation between the equipment and receiver.
- Connect the equipment into an outlet on a circuit different from that to which the receiver is connected.
- Consult the dealer or an experienced radio/TV technician for help.

Industry Canada

This Class (B) digital apparatus meets all the requirements of the Canadian Interference-Causing Equipment regulations.

Cet appareil numérique de la Classe (B) respecte toutes les exigences du Réglement sur le matériel brouilleur du Canada.

Overall Dimensions

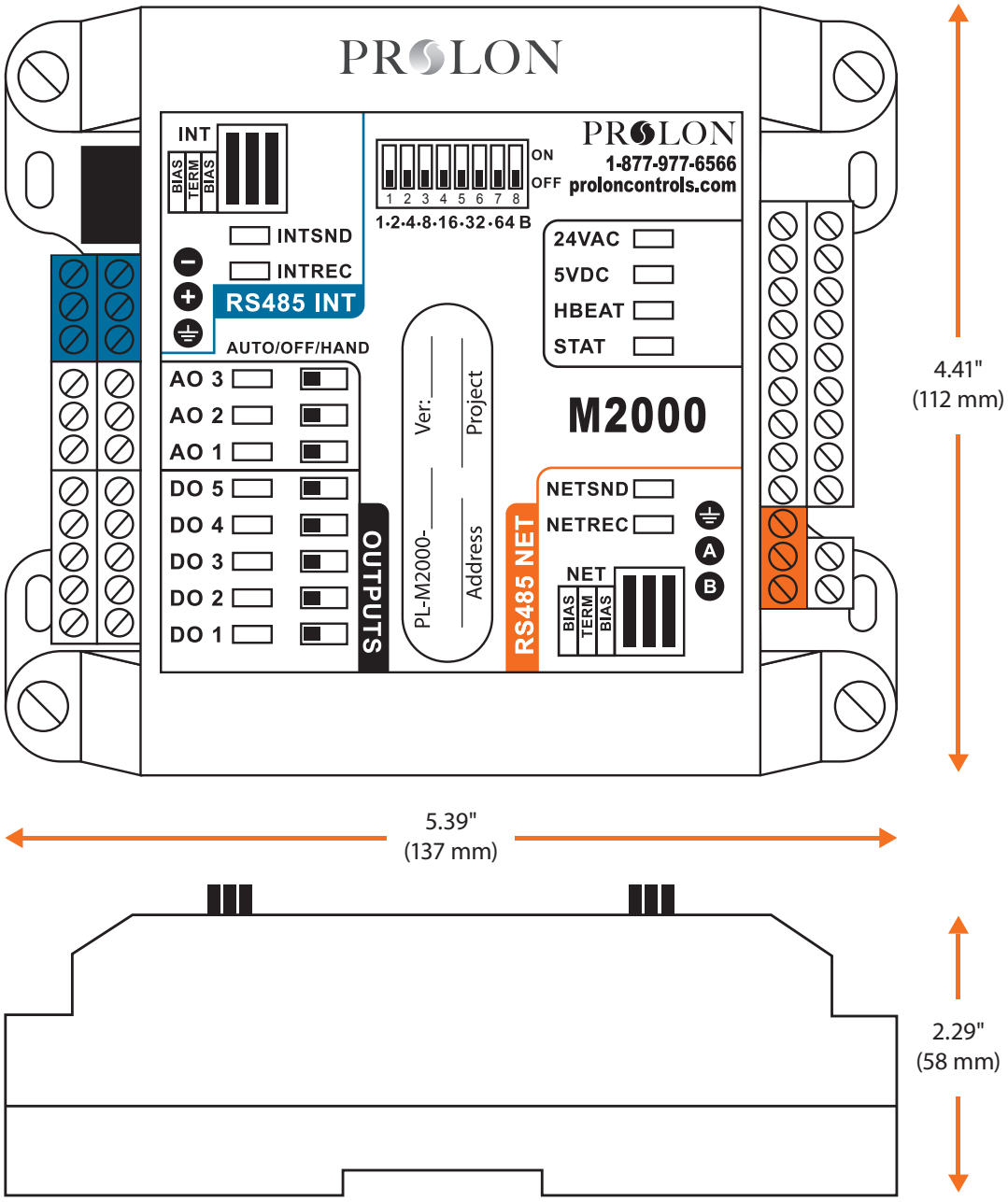

Figure 22 - M2000 Size Diagram

REV. 7.7.1

PL-HRDW-UNV-M2000-C/F-EN

© Copyright 2026 Prolon. All rights reserved.
No part of this document may be photocopied or reproduced by any means, or translated to another language without prior written consent of Prolon. All specifications are nominal and may change as design improvements are introduced. Prolon shall not be liable for damages resulting from misapplication or misuse of its products. All trademarks are the property of their respective owners.